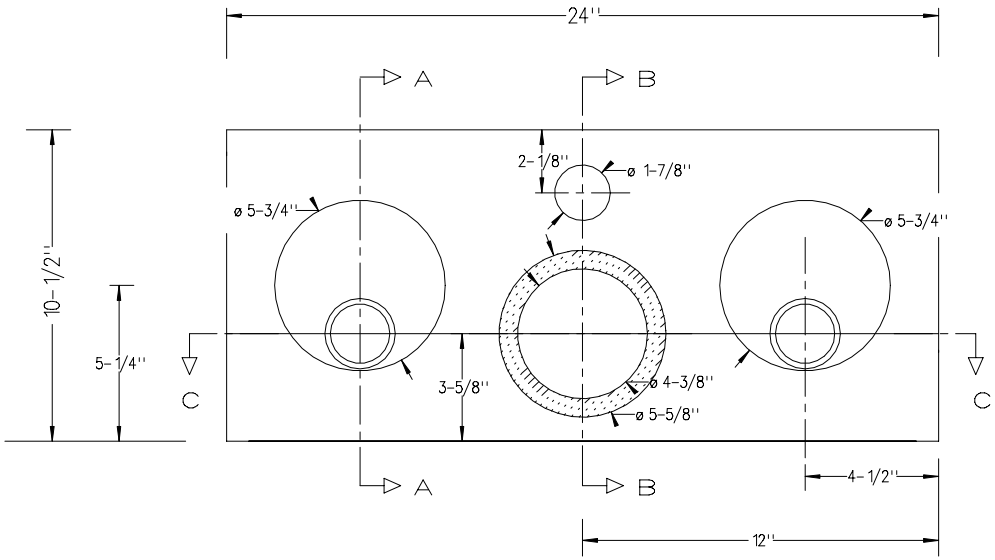

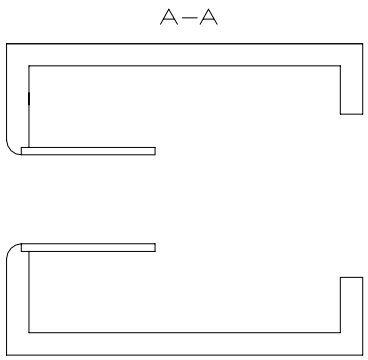

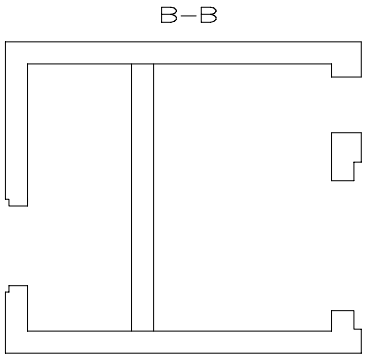

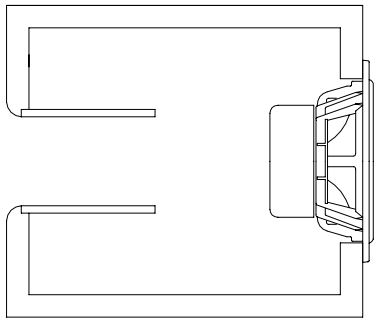

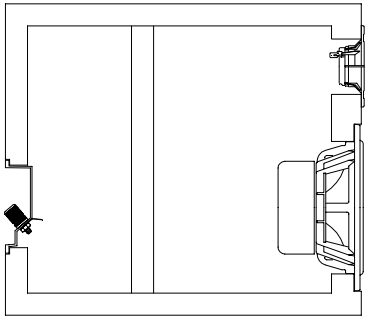

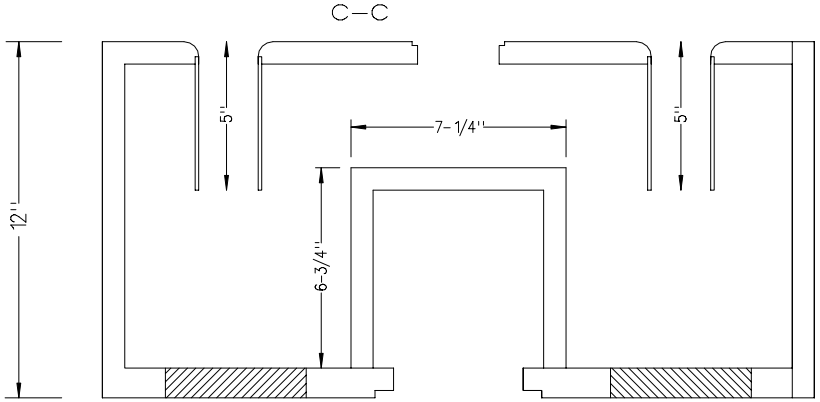

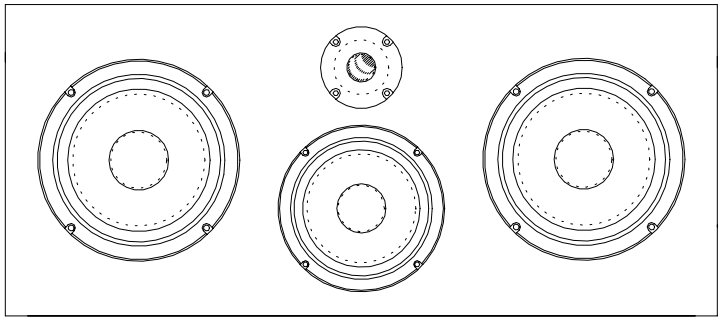

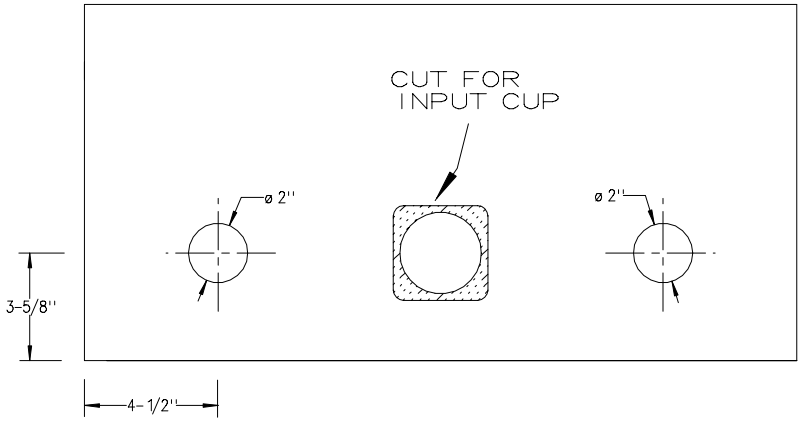

2) AP 170Z	UNLESS OTHERWISE SPECIFIED, DIMENSIONS ARE IN INCHES. TOLERANCES ARE:			JOE D'APPOLITO
1) AP 130Z0	FRACTIONS ±1/64 DECIMALS .XX ±.010 .XXX ±.005 ANGLES ±30'	APPROVALS	DATE	AUDAX
1) TM025F 1		DRAWN T ROBERTS	7/99	HOME THEATER CENTER CHANNEL
		CHECKED		
	DO NOT SCALE DRAWING			SCALE / SHEET 1 OF 1